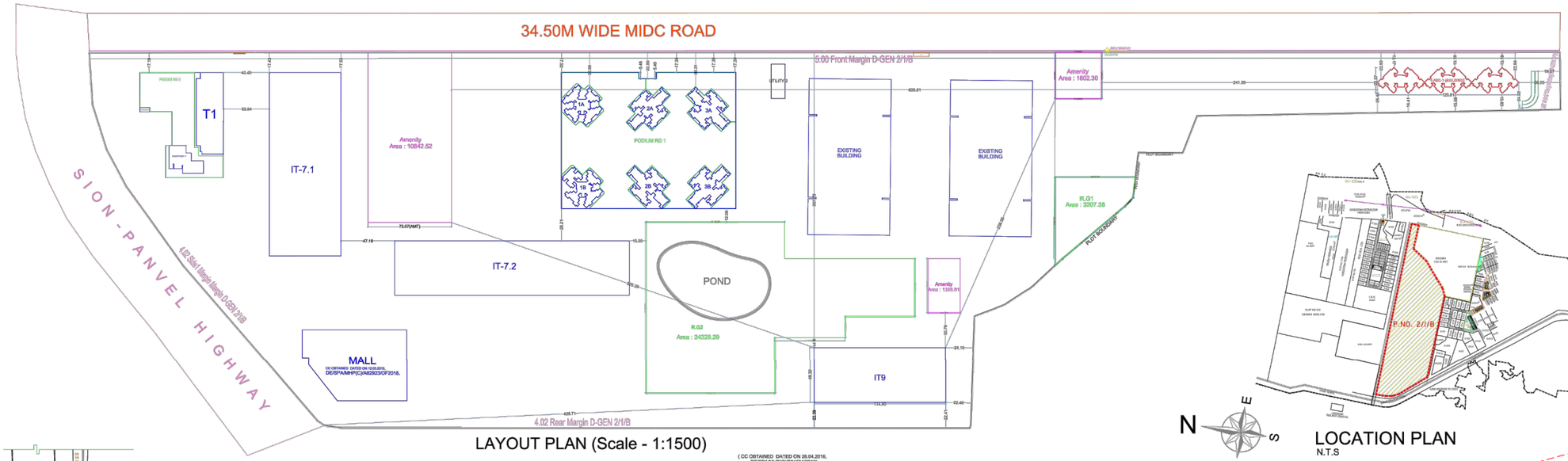

LAYOUT PLAN (Scale - 1:1500)

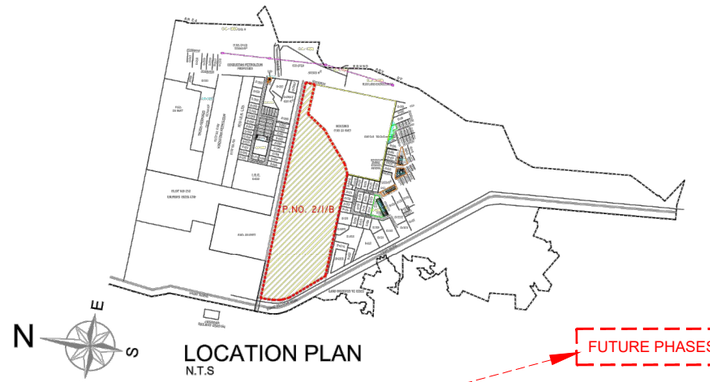

LOCATION PLAN
N.T.S

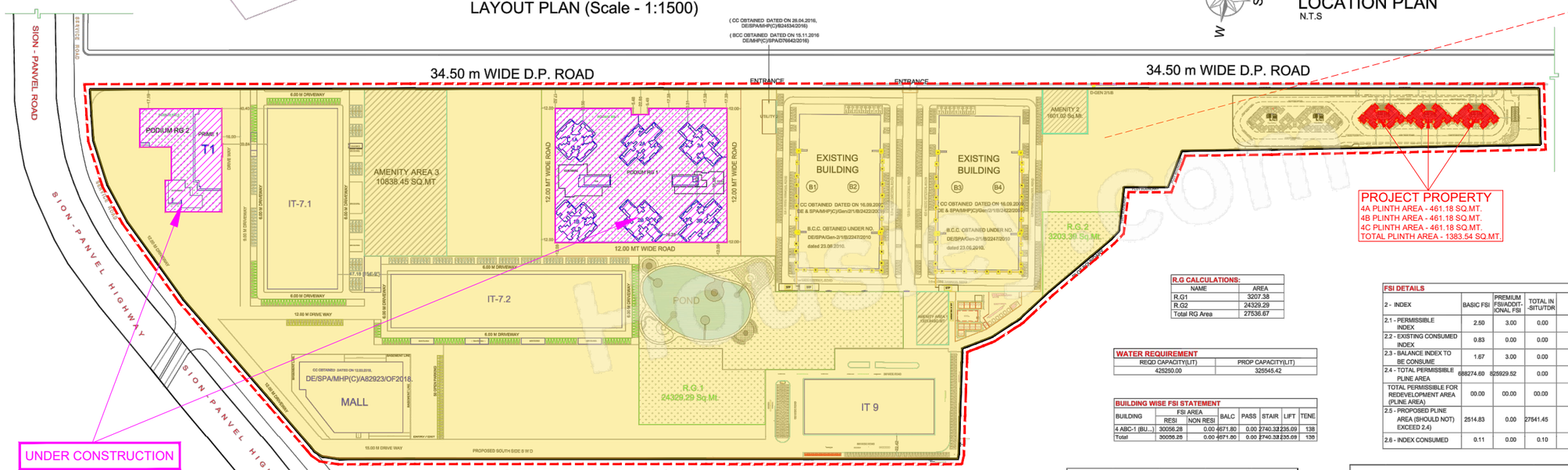

SITE PLAN (Scale - 1:1500)

LEGEND	
	FUTURE PHASES
	PROJECT PROPERTY
	UNDER CONSTRUCTION

R.G CALCULATIONS:	
NAME	AREA
R.G1	3207.38
R.G2	24329.29
Total RG Area	27536.67

WATER REQUIREMENT	
REQD CAPACITY(LIT)	PROP CAPACITY(LIT)
425250.00	525545.42

BUILDING WISE FSI STATEMENT							
BUILDING	FSI AREA		BALC	PASS	STAIR	LIFT	TENE
	RESI	NON RESI					
4 ABC-1 (BU...)	30056.28	0.00	4671.80	0.00	2740.32	235.69	138
Total	30056.28	0.00	4671.80	0.00	2740.32	235.69	138

CARPET AREA STATEMENT				
S. NO.	UNIT TYPE	NO. OF UNITS	CARPET AREA IN SQ.MT.	RERA CARPET AREA IN SQ.MT
1	2 BHK TYPE 1	138	28.87	30.45
2	2 BHK TYPE 2	138	47.19	49.87
3	3 BHK	138	49.25	52.33
4	TOTAL UNITS	414		

*Disclaimer : 1.The Developer reserves the right to change, amend , modify and alter, scope, scale and user of Larger Property by way of additions, alterations, amendments, deletions thereto, sub-division thereto or to any portion thereof, change of user , change/shift/sub-division of Larger Property(except Project Property) at any time in future in any manner whatsoever in accordance with the Applicable Law.
2.Future development shall comprise / utilize Mixed users, Maximum Development Potential and Maximum Heights as may be permissible.

Triangle	Area
A-01	6553.33
A-02	5849.10
A-03	5189.02
A-04	5830.58
A-05	5962.19
A-06	17164.44
A-07	7083.04
A-08	661.01
A-09	1121.15
A-10	2618.41
A-11	90096.71
A-12	24235.28
A-13	51177.59
A-14	12294.40
A-15	27467.11
A-16	33.44
A-17	94.73
A-18	138.99
A-19	299.69
A-20	105.48
A-21	104.39
A-22	331.39
A-23	90.86
A-24	52.11
A-25	437.19
A-26	143.43
A-27	25.16
A-28	41.61
A-29	39.62
A-30	84.65
A-31	269.41
A-32	699.01
A-33	310.67
A-34	119.98
A-35	628.05
A-36	2007.53
A-37	5929.07
Total (D-GEN 2/1/B)	375309.84

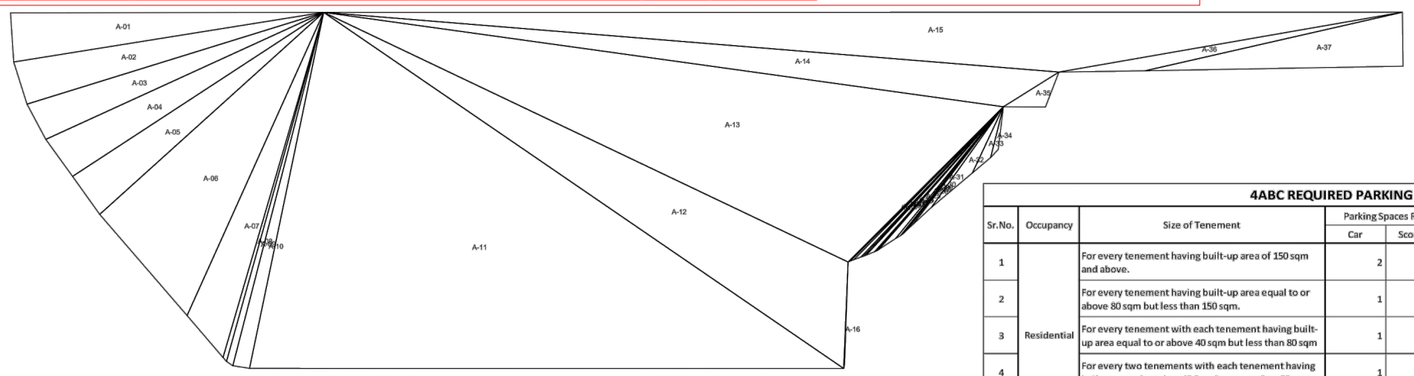

Triangulation (Scale - 1:2000)

4ABC REQUIRED PARKING STETEMENT									
Sr.No.	Occupancy	Size of Tenement	Parking Spaces Required per Unit			Proposed Tenements	Parking Spaces Required as per Tenement		
			Car	Scooter	Visitor		Car	Scooter	Visitor
1	Residential	For every tenement having built-up area of 150 sqm and above.	2	1	Add. 5% VP	-	-	-	-
2		For every tenement having built-up area equal to or above 80 sqm but less than 150 sqm.	1	1	Add. 5% VP	-	-	-	-
3		For every tenement with each tenement having built-up area equal to or above 40 sqm but less than 80 sqm	1	2	Add. 5% VP	-	-	-	-
4		For every two tenements with each tenement having built-up area less than 40 Sqm but more than 30 sqm.	1	1	Add. 5% VP	276	276	276	14
5		For every two tenements with each tenement having built-up area less than 30 Sqm.	-	2	Add. 5% VP	138	-	276	-
					TOTAL	414	276	552	14

PARKING CALCULATIONS									
CAR		SCOOTER		CYCLE		VISIT. PARKING			
Reqd	Prop	Reqd	Prop	Reqd	Prop	Reqd	Prop		
82	4951	151	757	0	0	17	213		

4ABC PROPOSED PARKING STETEMENT					
Sr.No.	FLOOR	Parking Spaces Proposed			
		Car	Composite Parking	Scooter	Visitor
1	UPPER GROUND FLOOR	219	16	141	23
2	LOWER GROUND FLOOR	180	16	141	62
3	BASEMENT 1 FLOOR	180	16	141	62
4	BASEMENT 2 FLOOR	117	16	51	9
5	BASEMENT 3 FLOOR	125	16	45	9
TOTAL		821	80	519	165

BUILT UP AREA STATMENT					
SR.NO.	BUILDING	BUILT UP AREA	REQ. PARKING	REQ. VISITOR PARK	PROPOSED PARKING
1	B1,B2,B3 & B4	29,230.89	390.00	39.00	430.00
2	IT-9	13,482.08	599.00	60.00	807.00
3	UTILITY 2	360.00	-	-	-
4	IT 7.1 & IT 7.2	58,055.92	674.00	67.00	745.00
5	Prime T1	37,285.30	374.00	37.00	597.00
6	MALL	23,032.49			300.00
7	1A &1B	20,812.66	158.00	16.00	457.00
8	2A & 2B	22,852.63	281.00	28.00	418.00
9	3A & 3B	23,548.47	217.00	21.00	475.00
10	TOTAL EXISTING BUILT UP APPROVED AREA	2,28,660.45		268.00	4,229.00

PROJECT TYPE - Building Development

SEAL OF APPROVAL

RAJARAM GUNDERA O RATHOD

Digitally signed by RAJARAM GUNDERAO RATHOD
DN: cn=RAJARAM GUNDERAO RATHOD c=IN o=Personal
Reason: I am the author of this document
Location:
Date: 2024-05-22 18:46+05:30

PROJECT INFORMATION	
CASE TYPE	-
LOCATION	Non-Congested Area
PLOT USE	Industrial Buildings
PLOT SUB USE	IITT

AREA STATEMENT	SQ. M.
1. AREA OF PLOT (Minimum area of a, b, c to be considered excluding NIP)	275309.84
(a) As per ownership document (7/12, CTS extract)	0.00
(b) as per measurement sheet	275309.84
(c) as per site	0.00
2. DEDUCTIONS FOR	
(a) Proposed D.P./ D.P. RW Area/Service Road /Highway	0.00
(b) Any D.P. Reservation area	0.00
(Total a+b)	0.00
3. BALANCE PLOT AREA (1 - 2)	275309.84
4. AMENITY SPACE (if applicable)	
(a) Required -	13765.49
(b) Adjustment of 2(b), if any -	000.00
(c) Balance Proposed -	13770.73
5. NET PLOT AREA (3-4(c))	275309.84
6. RECREATIONAL OPEN SPACE (if applicable)	
(a) Required -	27530.98
(b) Proposed -	27536.67
7. INTERNAL ROAD AREA	000.00
8. PLOTABLE AREA (if applicable)	000.00
9. BUILT UP AREA WITH REF. TO BASE F.S.I. AS PER FRONT ROAD WIDTH (Sr.no.5 x Base FSI)	688274.60
10. ADDITION OF FSI ON PAYMENT OF PREMIUM	
(a)Maximum permissible premium FSI - based on road width / TOD Zone.	825929.52
(b) Proposed FSI on payment of premium.	0.00
11. IN-SITU AND TDR LOADING	
(a)In-situ area against D.P. road [2.0 x Sr. No. 2 (a)],if any	0.00
(b) In-situ area against Amenity Space If handed over [2.00 or1.85 x Sr. No. 4 (b)and (c)(c)].	000.00
(c)TDR area -	0.00
(d) Total in-situ / TDR loading proposed [(11 (a)+(b)+(c))]	27541.45
12. ADDITIONAL FSI AREA UNDER CHAPTER No. 7	
13. TOTAL ENTITLEMENT OF FSI	
(a) [9 + 10(b)+11(d)] or 12 whichever is applicable	1514204.12
(b) Ancillary FSI (upto 60%or80% with payment of charges)	908522.47
(c) Total entitlement (a+b)	2422726.59
14. MAXIMUM UTILIZATION LIMIT OF F.S.I (Building Potential) Permissible As Per Road Width ([Reg. No. 6.1 or 6.2 or 6.3 or 6.4 as applicable]x1.8 or 1.8)	2422726.59
15. TOTAL BUILT-UP AREA IN PROPOSAL. (excluding area at sr.no.17 b)	
(a) Demolished Area.	0.00
(b) Existing Built-up Area.	228660.45
(c) Proposed Built-up Area (as per 'P-line')	30056.28
(c) Total (b+c)	258716.73
16. F.S.I. CONSUMED (15/13) should not be more than serial No.14 above.)	0.94
17. AREA FOR INCLUSIVE HOUSING, if any	
(a) Required (20% of Sr.No.5)	000.00
(b) Proposed	000.00

CERTIFICATE OF AREA

CERTIFIED THAT THE PLOT UNDER REF. WAS SURVEYED ME & THE DIMENSIONS OF THE SIDES, ETC. STATED ON THE PLAN ARE AS MEASURED ON THE SITE AND THE AREA SO WORKED OUT TALLIES WITH THE AREA STATED IN THE DOCUMENT OF CITY SURVEY / TP RECORDS.

LEGEND	
PLOT BOUNDARY SHOWN THICK BLACK	
PROPOSED WORK SHOWN RED FILLED IN	
DRAINAGE LINE SHOWN RED DOTTED	
WATERLINE SHOWN BLUE DOTTED	
EXISTING TO BE RETAINED HATCHED	
DEMOLISHION SHOWN HATCHED YELLOW	

OWNERS NAME & SIGN	ARCH.NAME,SIGN & ADD
Raheja Universal Pvt Ltd	kamal KUMAR KHEMANI
OWNER_SIGN	ARCH_SIGN

PROJECT INFORMATION	
PLOT NO	: D Gen 2/1/B
USE	: Industrial Buildings
SUBUSE	: IITT
NODE	: CTS/CS
SECTOR NO	:
PLOT ADDRESS	: CTS/CS:,Block No:,,Plot No:D Gen 2/1/B,Road/Street:

PERMIT NO	BW/314/621/202 40508/981347		
INWARD NO			
KEY NO	8958	SCALE	1:100
DATE	07-05-2024	SHEET NO	1 / 7