PRODUCED BY AN AUTODESK EDUCATIONAL PRODUCT

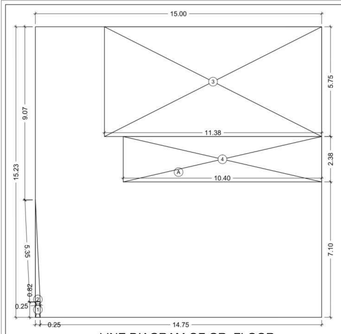

LINE DIAGRAM OF GR. FLOOR

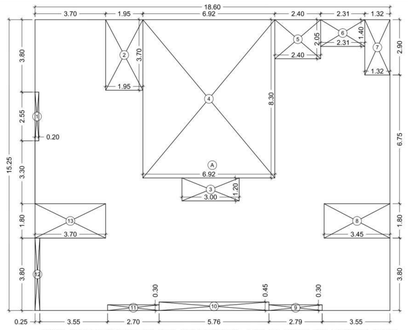

LINE DAIGRAM OF 4TH TO 7TH,9TH TO 14TH & 16TH TO 19TH FLOOR

BUILT UP AREA CALCULATION

4TH TO 7TH,9TH TO 14TH & 16TH TO 21ST FLOOR

A	18.60	X	15.25	X	1 NO	=	283.65	SQ.MT.		
					TOTAL ADDITION	=	283.65	SQ.MT.	X	

DEDUCTIONS

1	0.20	X	2.55	X	1 NO	=	0.51	SQ.MT.		
2	1.95	X	3.70	X	1 NO	=	7.22	SQ.MT.		
3	3.00	X	1.20	X	1 NO	=	3.60	SQ.MT.		
4	6.92	X	8.30	X	1 NO	=	57.44	SQ.MT.		
5	2.40	X	2.05	X	1 NO	=	4.92	SQ.MT.		
6	2.31	X	1.40	X	1 NO	=	3.23	SQ.MT.		
7	1.32	X	2.90	X	1 NO	=	3.83	SQ.MT.		
8	3.45	X	1.80	X	1 NO	=	6.21	SQ.MT.		
9	2.79	X	0.30	X	1 NO	=	0.84	SQ.MT.		
10	5.76	X	0.45	X	1 NO	=	2.59	SQ.MT.		
11	2.70	X	0.30	X	1 NO	=	0.81	SQ.MT.		
12	0.25	X	3.80	X	1 NO	=	0.95	SQ.MT.		
13	3.70	X	1.80	X	1 NO	=	6.66	SQ.MT.		
					TOTAL DEDUCTION	=	98.81	SQ.MT.	Y1	
TOTAL BUILT UP AREA [X - Y1]						=	184.84	SQ.MT.	X1	

BUILT UP AREA CALCULATION

8TH & 15TH FLOOR

A	18.60	X	15.25	X	1 NO	=	283.65	SQ.MT.		
					TOTAL ADDITION	=	283.65	SQ.MT.	X	

DEDUCTIONS

1	0.20	X	2.55	X	1 NO	=	0.51	SQ.MT.		
2	1.95	X	3.70	X	1 NO	=	7.22	SQ.MT.		
3	2.05	X	8.30	X	1 NO	=	17.02	SQ.MT.		
4	1.80	X	9.50	X	1 NO	=	17.10	SQ.MT.		
5	3.07	X	9.65	X	1 NO	=	29.63	SQ.MT.		
6	2.40	X	2.05	X	1 NO	=	4.92	SQ.MT.		
7	2.31	X	1.40	X	1 NO	=	3.23	SQ.MT.		
8	1.32	X	2.90	X	1 NO	=	3.83	SQ.MT.		
9	9.10	X	5.60	X	1 NO	=	50.96	SQ.MT.		
10	3.00	X	0.45	X	1 NO	=	1.35	SQ.MT.		
11	2.70	X	0.30	X	1 NO	=	0.81	SQ.MT.		
12	0.25	X	3.80	X	1 NO	=	0.95	SQ.MT.		
13	3.70	X	1.80	X	1 NO	=	6.66	SQ.MT.		
					TOTAL DEDUCTION	=	144.19	SQ.MT.	Y1	
TOTAL BUILT UP AREA [X - Y1]						=	139.46	SQ.MT.	X1	

Refuge Area Calculation

8th Fl. (Part Refuge)

8 Floor B.U.A. = 139.46 sq.mt.
9th to 14th Floor B.U.A. = 1109.04 sq.mt.
(184.84 x 6)
Total B.U.A. = 1248.50 sq.mt.
Refuge Area Reqd. = 4.0% of 1248.50 sq.mt.
= 49.94 sq.mt.
Refuge Area Reqd. = 4.25% of 1248.50 sq.mt.
= 53.06 sq.mt.
Refuge Area Proposed = 50.88 sq.mt.

15th Fl. (Part Refuge)

15 Floor B.U.A. = 139.46 sq.mt.
16th to 19th Floor B.U.A. = 739.36 sq.mt.
(184.84 x 4)

Total B.U.A. = 878.82 sq.mt.
Refuge Area Reqd. = 4.0% of 878.82 sq.mt.
= 35.15 sq.mt.
Refuge Area Reqd. = 4.25% of 878.82 sq.mt.
= 37.35 sq.mt.
Refuge Area Proposed = 53.71 sq.mt.
Excess Refuge Area Proposed = 16.31 sq.mt.

BUILT UP AREA SUMMARY

No. Of Floor	B.U.A
Grd. Fl.	137.38
1st Fl.	165.87
2nd Fl.	PARKING
3rd Fl.	PARKING
4th Fl.	184.84
5th Fl.	184.84
6th Fl.	184.84
7th Fl.	184.84
8th Fl.	139.46
9th Fl.	184.84
10th Fl.	184.84
11th Fl.	184.84
12th Fl.	184.84
13th Fl.	184.84
14th Fl.	184.84
15th Fl.	139.46
16th Fl.	184.84
17th Fl.	184.84
18th Fl.	184.84
19th Fl.	184.84
COL AREA	9.00
Excess Refuge	16.36
TOTAL	3195.29

Parking Area Statement

Fl. Name	Upto 45	45 to 60	60 to 90	Above 90	N.R. B.U.A.
Grd. Fl.					137.38
1st Fl.					165.87
2nd Fl.					
3rd Fl.					
4th Fl.	04.00				
5th Fl.	04.00				
6th Fl.	04.00				
7th Fl.	03.00				
8th Fl.	04.00				
9th Fl.	04.00				
10th Fl.	04.00				
11th Fl.	04.00				
12th Fl.	04.00				
13th Fl.	04.00				
14th Fl.	04.00				
15th Fl.	03.00				
16th Fl.	04.00				
17th Fl.	04.00				
18th Fl.	04.00				
19th Fl.	02.00				
20th Fl.					
Total	60.00				303.25

Parking Area Statement.

As per D.C. Rules Table No. 21
For N.R. Occupants :-
Parking reqd. / No. per 40.0 sq.mt.
Area Occupied by N.R. User = 303.25 sq.mt.
Parking Reqd. = 7.58 Nos.
10% Visitors Parking = 0.75 Nos.
Min.Visitors Parking Req. = 2.00 Nos.
Total Parking reqd. = 09.00 Nos. ..... (1)

1/8 Parking Space For Every
Tenement With A.C.A. UP TO 45.00 sq.mt.
Total Tenement =60.00 Nos.
Parking Required = 7.50 Nos. (2)

1/4 Parking Space For Every
Tenement With A.C.A. UP TO 45 TO 60 sq.mt.
Total Tenement = 0.00 Nos.
Parking Required =0.00 Nos. (3)

1/2 Parking Space For Every
Tenament with C.A. upto 60 To 90 sq.mt.
Total Tenement = 0.00 Nos.
Parking Reqd. = 0.00 Nos. (4)

1/1 Parking Space For Every
Tenament with C.A. Above 90 sq.mt.
Total Tenant = 0.00 Nos.
Parking Reqd. = 0.00 Nos. (5)

Total Resi. Parking = (2 + 3 + 4 +5) = 8.00 Nos.
Visitors Parking 10% = 0.80 Nos.
Min.Visitors Parking Req. = 1.00 Nos.
Total Parking reqd. = 09.00 Nos. ..... (6)
Total Parking reqd. = (1 + 6) = 18.00 Nos. .... (7)
50% Additional Parking as per Notification
Say = 09.00 Nos. ..... (8)
Total Parking Permissible (7 + 8) = 27.00 Nos.
= 29.00 Nos.
Total Parking Proposed = 29.00 Nos.

PERMISSIBLE AREA STATEMENT 33 (7)

C.S. NO. 217/74

PLOT AREA	= 523.42	SQ.MT.	
CARPET AREA (N.R- 254.86+R- 941.72)	= 1196.58	SQ.MT.	
ADDITIONAL 5%	= 59.83	SQ.MT.	
B.U.A. OF REHAB (1196.58x59.83) X 1.20	= 1507.69	SQ.MT.	(A)
80% INCENTIVE ON 1507.69 SQ.MT.	= 1206.15	SQ.MT.	(B)
TOTAL PERMISSIBLE AREA (A + B)	= 2713.84	SQ.MT.	(D)
CARPET AREA OF REHAB (N.R)	= 254.86	SQ.MT.	
ADDITIONAL 5%	= 12.74	SQ.MT.	
B.U.A. OF REHAB (N.R 254.86+12.74)X1.20	= 321.12	SQ.MT.	
35% FUNG. F.S.I ON REHAB (N.R)	= 112.39	SQ.MT.	
TOTAL B.U.A (INCL.) FUNGI. AREA	= 433.51	SQ.MT.	(I)
CARPET AREA OF REHAB (Resi.)	= 941.72	SQ.MT.	
ADDITIONAL 5%	= 47.09	SQ.MT.	
B.U.A REHAB (Resi.941.72+47.09)X1.20	= 1186.57	SQ.MT.	
35% FUNG. F.S.I ON REHAB (Resi.)	= 415.30	SQ.MT.	
TOTAL B.U.A (INCL.) FUNGI. AREA	= 1601.87	SQ.MT.	(II)
TOTAL PERMISSIBLE B.U.A (Rehab) INCL. FUNGIBLE AREA (I + II)	= 2035.38	SQ.MT.	(III)

PERMISSIBLE AREA CALCULATION FOR SALE PURPOSE

INCENTIVE AREA (80% of 1507.69 SQ.M.T.)	= 1206.15 Sq.mt.
ADD 35% FUNGIBLE	= 422.15 Sq.mt.
TOTAL SALE WITH FUNGIBLE	= 1628.30 Sq.mt.
TOTAL PERMISSIBLE ARE WITH FUNGIBLE	= 3663.68 Sq.mt.

STAMP & DATE OF APPROVAL

THIS PLAN IS DIGITALLY SIGNED & ISSUED
Approved Subject To Condition Mentioned in The File EB/5759/FS/A

RAJESH RAMCHANDRA GADKAR — S.E.B.P. (City)
JIBHAKATE BOSHAN NARESH — A.E.B.P. (City)
JITENDRA ARJUNRA WADKAR — E.E.B.P. (City)
MOHAMMED AKRAM MOHAMMED HUSAIN NIRBAN — Date: 2023.10.10 17:17:40 +05'30'
Ankit Prakash Dharia — Date: 2023.10.10 17:14:42 +05'30'

CONSTRUCTION AREA = 5692.48 SQ.MT.

BUILT UP AREA CALCULATION

GROUND FLOOR

A	15.00	X	15.23	X	1 NO	=	228.45	SQ.MT.		
					TOTAL ADDITION	=	228.45	SQ.MT.	X	

DEDUCTIONS

1	0.25	X	0.82	X	1 NO	=	0.21	SQ.MT.		
2	1/2 X	5.35	X	0.25	X 1 NO	=	0.67	SQ.MT.		
3	11.38	X	5.75	X	1 NO	=	65.44	SQ.MT.		
4	10.40	X	2.38	X	1 NO	=	24.75	SQ.MT.		
					TOTAL DEDUCTION	=	91.07	SQ.MT.	Y1	
TOTAL BUILT UP AREA [X - Y1]						=	137.38	SQ.MT.	X1	

LINE DAIGRAM OF 1ST FLOOR

BUILT UP AREA CALCULATION

1ST FLOOR

A	18.60	X	16.04	X	1 NO	=	298.34	SQ.MT.		
					TOTAL ADDITION	=	298.34	SQ.MT.	X	

DEDUCTIONS

1	0.25	X	0.82	X	1 NO	=	0.21	SQ.MT.		
2	1/2 X	5.35	X	0.25	X 1 NO	=	0.67	SQ.MT.		
3	3.62	X	0.81	X	1 NO	=	2.93	SQ.MT.		
4	7.82	X	3.56	X	1 NO	=	27.84	SQ.MT.		
5	8.68	X	3.00	X	1 NO	=	26.04	SQ.MT.		
6	9.65	X	2.38	X	1 NO	=	22.97	SQ.MT.		
7	1/2 X	3.53	X	1.15	X 1 NO	=	2.03	SQ.MT.		
8	1/2 X	6.28	X	1.93	X 1 NO	=	6.06	SQ.MT.		
9	4.65	X	3.00	X	1 NO	=	13.95	SQ.MT.		
10	3.60	X	7.10	X	1 NO	=	25.56	SQ.MT.		
11	1.65	X	2.55	X	1 NO	=	4.21	SQ.MT.		
					TOTAL DEDUCTION	=	132.47	SQ.MT.	Y1	
TOTAL BUILT UP AREA [X - Y1]						=	165.87	SQ.MT.	X1	

LINE DAIGRAM OF 8TH & 15TH FLOOR(REFUGE)

BUILT UP AREA CALCULATION

8TH FLOOR

R1	1.87	X	1.20	X	1 NO	=	2.24	SQ.MT.		
R2	3.07	X	1.95	X	1 NO	=	5.99	SQ.MT.		
R3	3.78	X	1.80	X	1 NO	=	6.80	SQ.MT.		
R4	3.00	X	3.35	X	1 NO	=	10.05	SQ.MT.		
R5	2.55	X	3.50	X	1 NO	=	8.92	SQ.MT.		
R6	3.55	X	3.80	X	1 NO	=	13.49	SQ.MT.		
R7	3.15	X	0.15	X	1 NO	=	0.47	SQ.MT.		
R8	3.24	X	0.90	X	1 NO	=	2.92	SQ.MT.		
					TOTAL ADDITION	=	50.88	SQ.MT.	X	

REFUGE AREA DIAGRAM AT 8TH FLOOR

BUILT UP AREA CALCULATION

15TH FLOOR

R1	2.45	X	1.20	X	1 NO	=	2.94	SQ.MT.		
R2	3.07	X	1.95	X	1 NO	=	5.99	SQ.MT.		
R3	3.78	X	1.80	X	1 NO	=	6.80	SQ.MT.		
R4	3.00	X	3.35	X	1 NO	=	10.05	SQ.MT.		
R5	2.55	X	3.50	X	1 NO	=	8.92	SQ.MT.		
R6	3.55	X	4.40	X	1 NO	=	15.62	SQ.MT.		
R7	3.15	X	0.15	X	1 NO	=	0.47	SQ.MT.		
R8	3.24	X	0.90	X	1 NO	=	2.92	SQ.MT.		
					TOTAL ADDITION	=	53.71	SQ.MT.	X	

REFUGE AREA DIAGRAM AT 15TH FLOOR

BUILT UP AREA CALCULATION

LINE DIAGRAM OF PLOT

PLOT

1	1/2 X	27.07	X	7.56	X 1 NO	=	102.32	SQ.MT.		
2	1/2 X	27.45	X	1.14	X 1 NO	=	15.65	SQ.MT.		
3	1/2 X	28.09	X	1.52	X 1 NO	=	21.35	SQ.MT.		
4	1/2 X	28.75	X	1.30	X 1 NO	=	18.69	SQ.MT.		
5	1/2 X	29.61	X	1.63	X 1 NO	=	24.13	SQ.MT.		
6	1/2 X	27.83	X	0.76	X 1 NO	=	10.58	SQ.MT.		
7	1/2 X	28.01	X	5.28	X 1 NO	=	78.17	SQ.MT.		
8	1/2 X	27.83	X	8.06	X 1 NO	=	112.15	SQ.MT.		
9	1/2 X	27.38	X	5.31	X 1 NO	=	72.69	SQ.MT.		
10	1/2 X	27.38	X	0.85	X 1 NO	=	11.64	SQ.MT.		
11	1/2 X	22.08	X	0.95	X 1 NO	=	10.49	SQ.MT.		
12	1/2 X	17.08	X	0.79	X 1 NO	=	6.75	SQ.MT.		
13	1/2 X	13.73	X	1.28	X 1 NO	=	8.79	SQ.MT.		
14	1/2 X	10.07	X	3.99	X 1 NO	=	20.09	SQ.MT.		
15	1/2 X	4.28	X	1.45	X 1 NO	=	3.10	SQ.MT.		
					TOTAL ADDITION	=	516.58	SQ.MT.	X	

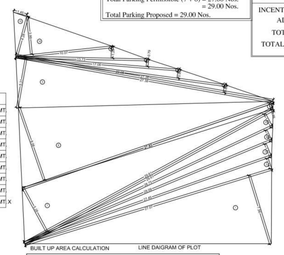

PROPOSE PLAN
SCALE : 1.500
SHEET NO. 475(Fifth Edition 1969)o/c
'F/S' WARD

BLOCK PLAN
SCALE : 1.500
SHEET NO. 475(Fifth Edition 1969)o/c
DIV- PAREL-SEWERI

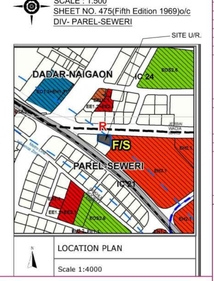

LOCATION PLAN
Scale 1:4000

Fitness Area Calculation

Permissible Area = 3241.53 sq.mt.
2% of 3264.07 = 64.83 sq.mt.
Permissible Fitness = 64.83 sq.mt.
Proposed Fitness = 64.78 sq.mt.

TABLE - II

DETAILS OF FUNGIBLE B.U.A FOR REHAB / SALE & PREMIUM CALCULATIONS

Sr.No.	Description	Residential in Sq.Mt.	Commercial in Sq.Mt.	Total in Sq.Mt.	
1.	Permissible B.U.A (Sr.No.14 of Proforma-A)	2392.72	321.12	2713.84	
2.	Permissible Fungible B.U.A. (1)(0.35 or 0.20)	837.45	112.39	949.84	
3.	Total Permissible B.U.A. (1+2)	3230.17	433.51	3663.68	
4.	Total Proposed B.U.A. Including Fungible F.S.I. (14+B3 of Proforma -A) [Check; Shall not be more than- 3 (Total A+B of column No.21 of Table No.I)]	2475.78	N.R.- 303.25 Resi.- 416.26 Total 719.51	3195.29	
5.	Permissible Fungible B.U.A.for rehab, MHADA & M.C.G.M. Component (Total A+B of column No.15 of Table No.I)	415.30	112.39	533.53	
6.	Fungible B.U.A. utilized for rehab, MHADA & M.C.G.M. (Col.19-14-20) of Table No.I [Check; Shall not be more than 5 above & shall be equal to 5- Col.No.21 of Table No.I]	373.01	112.39	485.40	
7.	Permissible Fungible B.U.A. for Sale Component (2-5)	422.15	0.00	422.15	Not Claim at this Stage
8.	Fungible B.U.A. utilized for Sale (4-1-6) above (-E-I-6) above [Check; Shall not be more than 7 above]	-289.95	286.00	-3.95	
9.	Ready Reckner Rate for the Year 2022-23				
10.	% of Ready Reckner Rate	50%	60%		
11.	Premium amount to be recovered (8x9x10)				
12.	Payment Receipt No.& Date				

MOHAMMED AKRAM MOHAMMED HUSAIN NIRBAN	JIBHAKATE BOSHAN NARESH	Ankit Prakash Dharia	
OWNER SIGN.		ARCH. / L.S.SIGN.	

	PROFORMA 'A'	SQ. MTS.
I	Area Statement	
1.	Area of the Plot = Area of House Gully	523.42
a)	Area of reservation plot	-
b)	Area of road setback	-
c)	Area of DP road	-
2.	Deductions for.	-
(A)	For Reservation/Road Area	-
(a)	Road setback area to be handed over (100% i/Regulation No. 16)	-
(b)	Proposed DP road to be handed over (100% i/Regulation No. 16)	-
(c)	(i)Reservation area to be handed over (100% i/Regulation no. 17)	-
(ii)	Reservation area to be handed over per AR (100% i/Regulation no. 17)	-
(B)	For Amenity area	-
(a)	Area of amenity plot/plots to be handed over As per DCR. 14(A)	-
(b)	Area of amenity plot/plots to be handed over As per DCR. 14(B)	-
(c)	Area of amenity plot/plots to be handed over As per DCR. 35(abyance)	-
(C)	Deductions for Existing BUA to be retained if any/ Land component of Existing BUA(Existing BUA as per Regulation under which the development was allowed.	-
3.	Total deductions; [2(A) + 2(B)] + 2(C) as and when applicable.]	-
4.	Balance area of plot (1 - 3)	523.42
5.	Plot area under Development after areas to be handed over to MCGM/ Appropriate Authority as per Sr.No. 4 above.	523.42
5A.	Permissible Floor area	2713.84
6.	Zonal (basic) FSI (0.50 or 1 or 1.33 or as per DCPR 33(7 of 2034 = 3.00)	-
7.	Built up area as per Zonal (basic) FSI (5A * 6)	-
	TOTAL	2713.84
	Ins case of Mill land Permissible BUA kept in abeyance)	-
8.	Builtup Area equal to area of land handed over as per Regulation 30(A)	-
(i)	As per 2(A) and 2(B) (except 2(A) (c) (ii) above with in cap of 'Admissible TDR" as column 6 of Table - 12 on remaining / balance plot.)	-
(ii)	in case of 2(A)(c)(ii) permissible over and above permissible BUA on remaining/ balance plot.	-
9.	Built up Area in lieu of cost of construction of built up amenity to be handed over (within the limit of permissible BUA on remaining plot)	-
10.	Built up area due to "Additional FSI on Payment of Premium" as per Table No. 12 Regulation No.30(A) on remaining plot/ balance plot.	-
11.	Builtup area due to admissible "TDR" as per Table no 12 of Regulation No. 30(A) and 32 on remaining/ balance plot.	-
12.	Permissible Built up area [as the case may be with / without BUA as per 2(c)]	2713.84
13.	Proposed BUA [as the case may be with / without BUA as per 2(c)]	2709.89
14.	TDR generated if any as per regulation 30 (A) and 32.	-
15.	Fungible Compensatory Area as per Regulation No. 31(3)	955.68
(a)	i) Permissible Fungible Compensatory area for Rehab component without charging premium	533.53
	ii) Fungible Compensatory area proposed for Rehab component without charging premium	485.40
(b)	i) Permissible fungible Compensatory area by charging premium.	422.15
	(ii) Fungible Compensatory area proposed on payment of premium.	00.00
16.	Total Built up Area proposed including Fungible Compensatory Area [13 + 15 (a)(ii)+15(b)(ii)]	3195.29
17.	FSI consumed on Net Plot[13/ 4]	5.1682
(II)	Other Requirements	-
(A)	Reservation/Designation	-
	(a) Name of Reservation	-
	(b) Area of Reservation affecting the plot	-
	(c) Area of Reservation land to be handed/handed over as per Regulation No. 17	-
	(d) Built up area of Amenity to be handed over as per Regulation No. 17	-
	(e) Area/Built up Area Designation	-
(B)	Plot area/Built up Amenity to be Handed Over as per Regulation No	-
	(i) 14(A)	-
	(ii) 14(B)	-
	(iii) 15	-
(C)	Requirement of Recreational Open space in Layout/Plot as per Regulation No. 27	-
(D)	Tenement Statement	-
	(i) Proposed built up area (13 above)	-
	(ii) Less deduction of Non-residential area (Shop etc.)	-
	(iii) Area available for tenement [(i) minus (ii).]	-
	(iv) Tenements Permissible (Density of tenement/hectare) [16.28 * 450 PER HECTOR / 10,000 = 9.73	-
	(v) Total number of Tenements proposed on the plot	-
(E)	Parking statement	
	(i) Parking required by Regulation for - Car	As Per Statement
	Scooter/ Motor	
	Cycle Outsiders (visitors)	
	(ii) Covered garage permissible	
	(iii) Covered Garages Proposed	
	Car Scooter/ Motor	
	Cycle Outsider (Visitors)	
	(iv) Total parking provided	
(F)	Transport Vehicles Parking	
	(i) Spaces for transport vehicles parking required by Regulations	
	(ii) Total No. of transport vehicles parking spaces provided	

P R O F O R M A -- B

CONTENT OF SHEETS

Ground Floor Plan, 1st Floor Plan, 2nd & 3rd Podium floor,
4th to 7th , 9th to 14th & 16th to 21st Floor Plan, 8th Floor Plan,
Built Up Area Diagram & Calculation, Set Back Area Diagram & Calculation,
Plot Area Diagram & Calculation, Permissible Area Statement, Built Up Area Summary
Parking Area,Statement, Propposed Block Plan, Location & Block Plan

CLIENTS NAME & SIGNATURE

M/S. NIRBAN HOUSING & DEVELOPMENT LLP

DESCRIPTION OF PROPOSAL :

PROPOSED REDEVELOPMENT OF PROPERTY BEARING C.S.NO. 217/74, 218/74PL,OT NO. 219B OF SUPARIBAUG ESTATE SCHEME NO. 31, SITUATED AT JERBAI WADIA ROAD,PAREL SEWERI DIVISION, F/S-WARD, MUMBAI.

Licensed Surveyor.
A.P. Dharia & Associates.
Office No. 1&2 Gr. Floor
Bldg. No. 146 B Patel Bldg.
N.M. Joshi Marg Opp.Fish
Market Lower Parel (W)
Mumbai-400 013
TEL. : 24919666, 9322130068

FILE NO. / Sheet No.	DRAWN BY	SCALE	CHECKED BY	DATE
01	DIPTI	1 / 100	A.P. Dharia	28 02 23

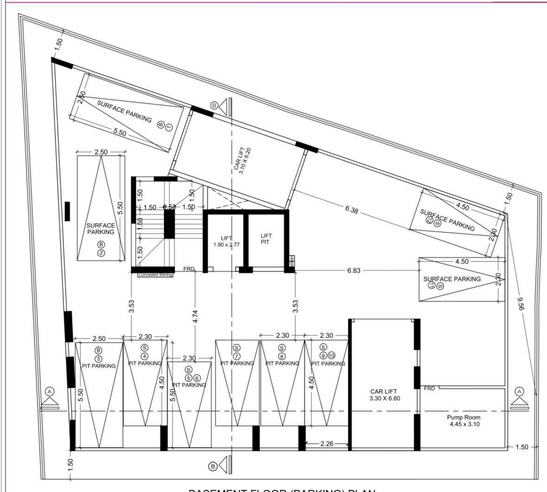

BASEMENT FLOOR (PARKING) PLAN

24.40 MT. WD. J E R B A I W A D I A R O A D

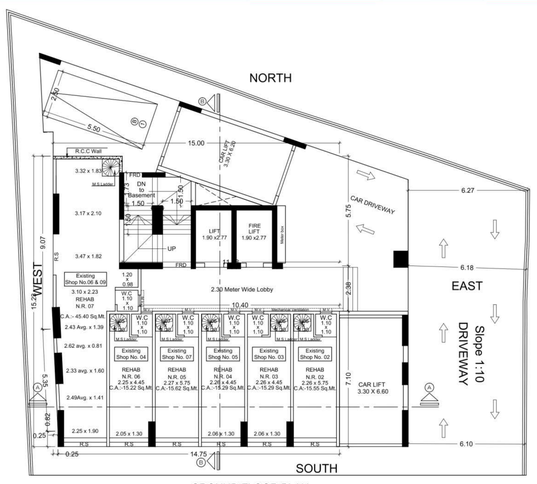

GROUND FLOOR PLAN

24.40 MT. WD. J E R B A I W A D I A R O A D

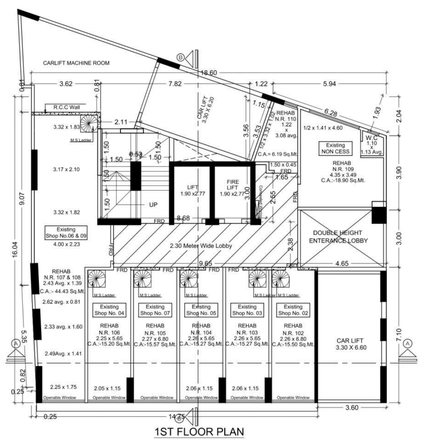

1ST FLOOR PLAN

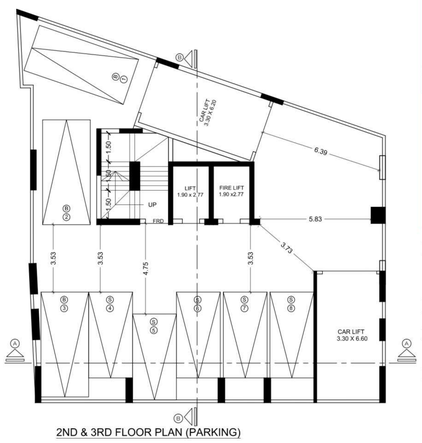

2ND & 3RD FLOOR PLAN (PARKING)

PRODUCED BY AN AUTODESK EDUCATIONAL PRODUCT